resideo

CENTRIC
Butterfly Valve
RUBBER SEATED

VF - 730 Series

LEVER · GEAR · PNEUMATIC
ELECTRIC OPERATED.

ALLOWABLE PRESSURE
DN 40 - 600 : 16bar
DN 650 -1200 : 10bar

www.tuv.com
TÜV
TÜV Rheinland Group
ID:9105016048

INVESTMENT CASTING
STAINLESS STEEL BODY

1.5" - 24"(40mm - 600mm)

DESIGN DETAILS AND SPECIFICATIONS

VF-730 (WAFER TYPE)
VF-733 (LUG TYPE)
VF-737 (FLANGE TYPE)

FACE TO FACE: Valve body are designed to meet ISO 5752 table 5 short.

TOP WORKS:

24" and below, valve mounting flange and stem shall be per ISO 5211.
28" and above, valve mounting flange per ISO 5211, stem shall be round keyed.

FLANGE REQUIREMENT:

VF-730. VF-733: ANSI 125/150. BS Table E. JIS 10K. DIN PN10. DIN PN16.
All wafers have locating holes for ease of installation.
VF-737: ANSI 150. JIS10K. DIN PN10. DIN PN16

PRESSURE RATING:

Bi-directional bubble-tight shut off to 16bar (230psi)------DN40~DN600mm.
10bar (150psi)------DN650~DN1000mm.

and tested to 110% of full rating 18bar (260psi)------DN40~DN600mm.
11bar (160psi)------DN650~DN1000mm.

SHELL TESTING:

The body strength can stand 150% of full rating.
24bar (340psi)------DN40~DN600mm.
15bar (220psi)------DN650~DN1000mm.

INSTALLATION INSTRUCTIONS:

The valve is designed for using between all types of flat or raised face flanges. DO NOT USE FLANGE GASKETS. The butterfly valve design eliminates the need for gaskets. For proper installation, the space between flanges must be sufficient to permit valve insertion without disturbing the rubber liner flange seal. Note that the disc sealing edge is in line with the flat of the shaft. Rotate the stem to position the disc within the body, place the valve between flanges and hand-tighten the bolts. SLOWLY OPEN the valve counterclockwise to check for adequate disc clearance. RETURN THE DISC TO 10% OPEN POSITION and cross tighten all bolts, again check for adequate disc clearance.

STEM RETAINING MECHANISM:

The stem is retained in the body by means of a special "Q" type design when the valve size is under DN350mm, and hence the stem can be removed from the body and disc without any special tools.
*Unless you do intend to disassemble the valve, otherwise do not position the disc around 135°

Anti-Condensed: (On customer's requirement)

DESIGN DETAILS AND SPECIFICATIONS

VF-730 (WAFER TYPE)
VF-733 (LUG TYPE)
VF-737 (FLANGE TYPE)

Kv Values-Valve Sizing Coefficient.

Size		Disc Angle (Open Degree)								
mm	inch	10°	20°	30°	40°	50°	60°	70°	80°	90°
40	1 1/2	0.7	2.4	6.9	14.2	22	36	59	81	113
50	2	1.1	3.8	10.2	22	38	60	100	132	193
65	2 1/2	2	7.5	18.2	35	61	95	187	240	315
80	3	2.5	9.8	26	48	83	126	214	338	425
100	4	3.8	14.6	39	72	119	221	361	606	723
125	5	6.5	24	62	118	217	394	599	1038	1243
150	6	10	41	95	175	326	542	873	1260	1859
200	8	19	64	165	306	573	995	1567	2310	3124
250	10	28	101	245	451	836	1462	2253	3256	4757
300	12	34	129	312	615	1137	2125	3248	4991	7058
350	14	47	163	390	795	1498	2573	3980	5749	8319
400	16	62	231	508	1077	1973	3381	5385	8099	11458
450	18	75	256	621	1208	2315	3925	6331	9474	13612
500	20	103	346	859	1692	3086	5348	8513	13109	18748
550	22	125	418	1039	2047	3734	6471	10300	15861	22685
600	24	139	494	1153	2389	4466	7561	11945	18088	25217
650	26	163	579	1353	2804	5241	8873	14018	21228	29595
700	28	191	659	1674	3224	5990	10659	17442	25194	36821
750	30	203	700	1777	3420	6354	11307	18503	26727	39062
800	32	257	973	2302	4533	8235	14123	23021	31613	45995
900	36	329	1253	2950	5862	10810	18184	29756	42893	61044
950	38	460	1730	4020	7180	12170	19800	32490	49320	62150
1000	40	510	1919	4456	7956	13494	21939	36000	54649	68874
1050	42	562	2116	4913	8771	14877	24188	39690	60251	75934
1100	44	617	2322	5392	9627	16328	26546	43560	66125	83338
1200	48	734	2763	6417	11457	19431	31592	51840	78695	99179

Kv value denotes the flow rate in m^3/hr for water at 20°C flowing under a pressure differential 1 Kg/cm^2. When require Cv = 1.17Kv.

Expected Seating/ Unseating Torque (Nm) including 30% Safety Factor

Size		Lubricating (Non-corrosive) ΔP (bar)				Dry (Non-Lubricating) ΔP (bar)		
mm	inch	3	6	10	16	3	6	10
40	1 1/2	15	17	19	23	19	21	23
50	2	15	17	19	23	19	21	23
65	2 1/2	18	20	22	26	22	24	27
80	3	28	31	34	41	34	38	42
100	4	37	41	45	54	45	50	56
125	5	61	68	76	91	76	84	93
150	6	116	127	140	154	126	138	152
200	8	171	190	211	253	211	234	260
250	10	275	306	340	408	340	378	420
300	12	381	423	470	564	470	522	580
350	14	545	605	672		672	747	830
400	16	728	809	899		899	999	1110
450	18	912	1013	1126		1126	1251	1390
500	20	1135	1261	1401		1401	1557	1730
550	22	1373	1525	1695		1695	1884	2093
600	24	1325	1472	1636		1636	1818	2020
650	26	1555	1727	1920		1920	2133	2370
700	28	2339	2599	2888		2888	3209	3566
750	30	2608	2898	3220		3220	3578	3975
800	32	3008	3342	3713		3713	4125	4583
900	36	3828	4253	4726		4726	5251	5834
950	38	4415	4920	6610		5450	6050	7100
1000	40	5090	5680	7620		6280	7010	9410
1050	42	5611	6262	8401		6924	7728	10374
1100	44	6158	6872	9262		7599	8481	11385
1200	48	7328	8178	11022		9043	10093	13548

To Use The Torque Chart, Note The Following

1) Seating/Unseating torque values above included friction bearing torque for stated ΔP.
2) Do not apply a safety factor to above torque values when determining actuator output torque requirement.

MATERIALS
DN 40 ~ DN 600

VF-730 (WAFER TYPE)
VF-733 (LUG TYPE)
VF-737 (FLANGE TYPE)

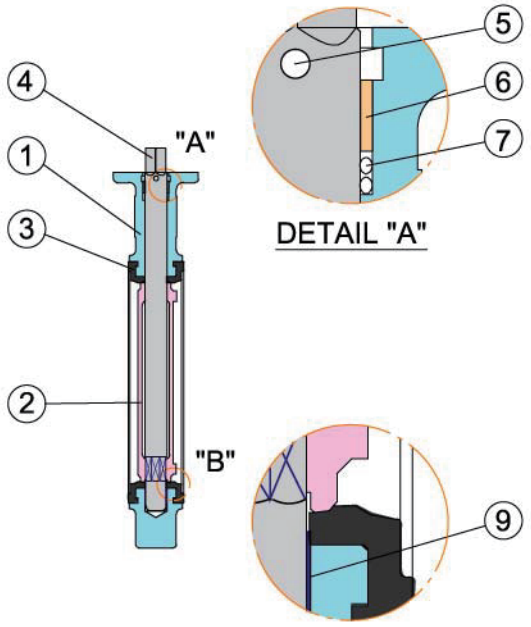

DETAIL "A"

Size DN 40 to 300

DETAIL "B"

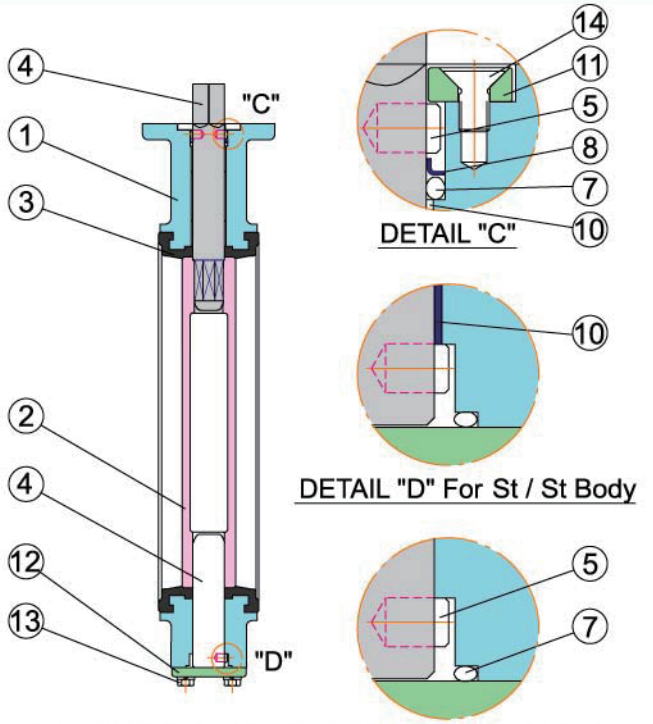

DETAIL "C"

DETAIL "D" For St / St Body

Size DN 350 to 600

DETAIL "D" For DI. & CI. Body

No.	Name	Materials	Specification JIS	Specification ASTM	Remark
1	BODY	CAST IRON	FC 200	A126 Cl. B	(1.5"~24")
		DUCTILE IRON	FCD 400	A395	(1.5"~24")
		STAINLESS STEEL	SCS 13A	A351 Gr. CF8	(14 "~24")
			SCS 14A	A351 Gr. CF8M	
2	DISC	DUCTILE IRON	FCD 400	A395	Nylon 11 coated
		STAINLESS STEEL	SCS 13A	A351 Gr. CF8	
			SCS 14A	A351 Gr. CF8M	
		ALU-BRONZE	ALBC2	B148 C95400	
3	SEAT	NBR (NITRILE)			-10°~ 80°C (14°~ 176°F)
		EPDM			-20°~ 120°C (-4°~ 248°F)
		EPT			-20°~ 140°C (-4°~ 284°F)
		NEOPRENE (CR)			0°~ 80°C (32°~ 176°F)
		SILICON			-20°~ 180°C (-4°~ 356°F)
		HYPALON (CSM)			-20°~ 135°C (-4°~ 275°F)
		VITON			-18°~ 204°C (-0.4°~ 400°F)
4	STEM	STAINLESS STEEL	SUS 410	A182 Gr. F6A	
			SUS 304	A182 Gr. F304	
			SUS 316	A182 Gr. F316	
5	PIN	STAINLESS STEEL	SUS 304	A182 Gr. F304	
6	BUSH	DELRIN			
7	O-RING	NBR (NITRILE)			
8	THRUST RING	STAINLESS STEEL	SUS 304	A240 Gr. 304	
9	BUSH	BRONZE	BC6	B62	For cast iron and ductile iron body
10	BUSH	RPTFE+STAINLESS STEEL	RPTFE+SUS316	RPTFE+A240 Gr. 316	
11	UPPER COVER	CAST IRON	FC 200	A126 Cl. B	For cast iron and ductile iron body
		STAINLESS STEEL	SUS 304	A240 304	For stainless steel body
12	BOTTOM COVER	CAST IRON	FC 200	A126-B	For cast iron and ductile iron body
		STAINLESS STEEL	SCS 13A	A351 Gr. CF8	For stainless steel body
13	BOLT	STEEL			
14	BOLT	STEEL			

MATERIALS
DN650 ~ DN1200

VF-730 (WAFER TYPE)
VF-737 (FLANGE TYPE)

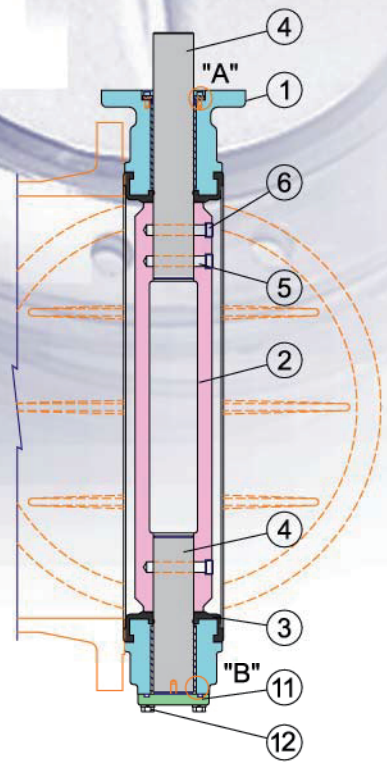

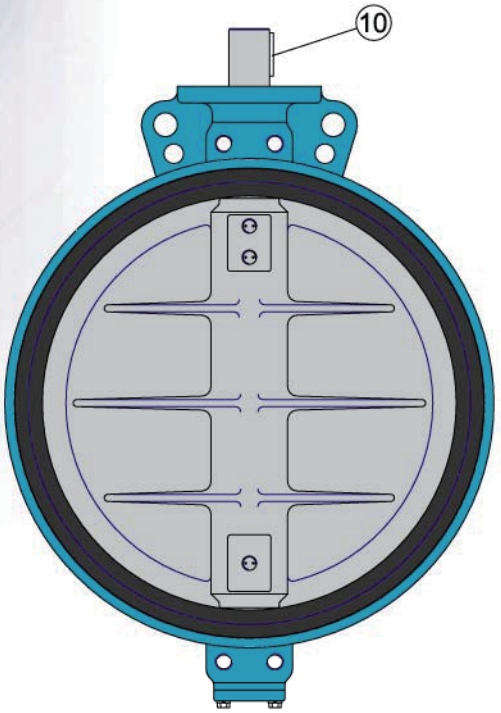

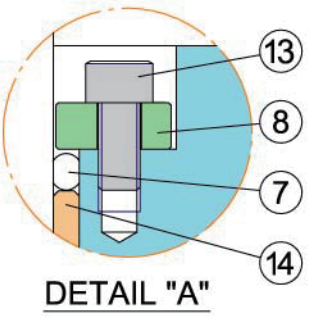

DETAIL "A"

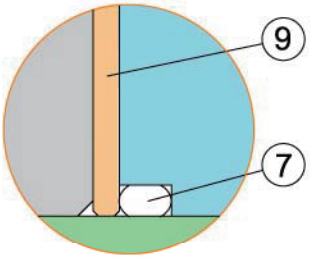

DETAIL "B"

No.	Name	Materials	Specification JIS	Specification ASTM	Remark
1	BODY	DUCTILE IRON	FCD 400	A395	VF-730 (26"~36") VF-737 (26"~48")
		STAINLESS STEEL	SCS 13A	A351 Gr. CF8	
			SCS 14A	A351 Gr. CF8M	
2	DISC	DUCTILE IRON	FCD 400	A395	Nylon 11 coated
		STAINLESS STEEL	SCS 13A	A351 Gr. CF8	
			SCS 14A	A351 Gr. CF8M	
		ALU-BRONZE	ALBC2	B148 C95400	
3	SEAT	NBR (NITRILE)			-10°~ 80°C (14°~ 176°F)
		EPDM			-20°~ 120°C (-4°~ 248°F)
		EPT			-20°~ 140°C (-4°~ 284°F)
		NEOPRENE (CR)			0°~ 80°C (32°~ 176°F)
		SILICON			-20°~ 180°C (-4°~ 356°F)
		HYPALON (CSM)			-20°~ 135°C (-4°~ 275°F)
		VITON			-18°~ 204°C (-0.4°~ 400°F)
4	STEM	STAINLESS STEEL	SUS 410	A182 Gr. F6A	
			SUS 304	A182 Gr. F304	
			SUS 316	A182 Gr. F316	
5	PIN	STAINLESS STEEL	SUS 316	A182 Gr. F316	
6	PLUG	STAINLESS STEEL			
7	O-RING	NBR (NITRILE)			
8	UPPER COVER	STEEL	SS400	A36	For cast iron and ductile iron body
		STAINLESS STEEL	SUS 304	A240 Gr. 304	For stainless steel body
9	BUSH	BRONZE	BC6	B62	For cast iron and ductile iron body
		RPTFE+STAINLESS STEEL	RPTFE+SUS316	RPTFE+A240 Gr. 316	For stainless steel body
10	KEY	STEEL			
11	BOTTOM COVER	CAST IRON	FC 200	A126 Cl. B	For cast iron and ductile iron body
		STAINLESS STEEL	SCS 13A	A351 Gr. CF8	For stainless steel body
12	BOLT	STEEL			
13	BOLT	STEEL			
14	BUSHING	PTFE + 316 SS			

DIMENSIONS
VF-730 WAFER TYPE
DN 40 ~ DN 900

PRESSURE RATING:
DN 40-600 16 BAR
DN 650-900 10 BAR

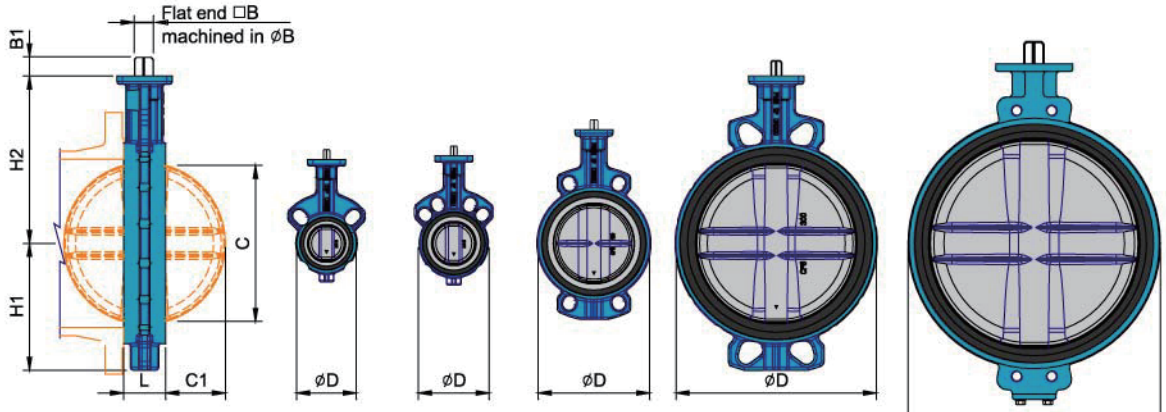

Size DN350 to 600

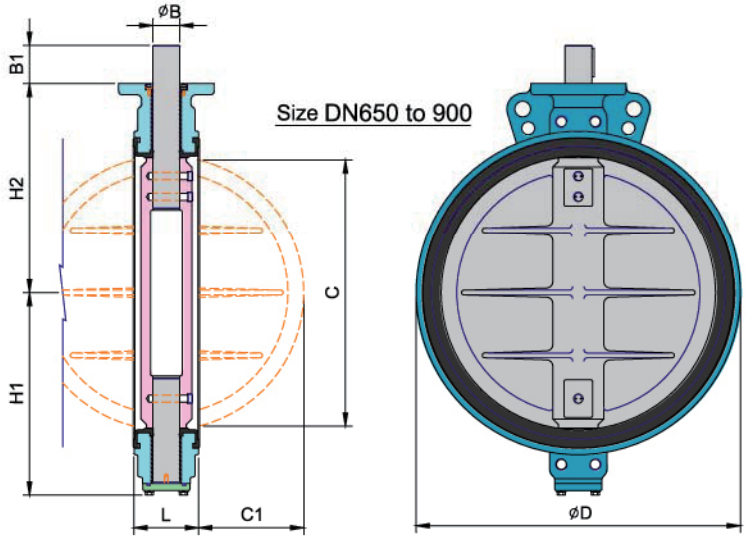

Size DN650 to 900

Size		Face to Face				Mounting flange (ISO 5211)		Shaft end			Key	Disc clearance		Weight
mm	inch	L	H1	H2	D	Type	PCD	øB	□B	B1		C	C1	kg
40	1 1/2	33	60	120	81	F07	70	14	11	19		34	7	2
50	2	43	65	143	96	F07	70	14	11	19		39	8	3
65	2 1/2	46	71	155	110	F07	70	14	11	19		55	13	3.8
80	3	46	77	162	124	F07	70	14	11	19		69	19	4
100	4	52	107	181	148	F07	70	14	11	19		91	27	5.3
125	5	56	122	197	180	F07	70	18	14	19		115	36	7.3
150	6	56	150	210	206	F07	70	18	14	19		140	47	8.2
200	8	60	165	240	259	F10	102	22	17	24		186	68	13.5
250	10	68	201	286	320	F10	102	25	19	24		239	90	21.2
300	12	78	234	309	370	F10	102	28	22	24		288	111	32.5
350	14	78	301	329	412	F12	125	35	27	29		325	128	48
400	16	102	333	361	475	F12	125	35	27	29		375	143	60
450	18	114	358	393	530	F14	140	48	36	38		423	162	80
500	20	127	392	427	585	F14	140	48	36	38		473	182	125
550	22	154	397	475	635	F14	140	50	36	38		507	186	130
600	24	154	454	492	687	F16	165	60	46	48		560	214	200
650	26	165	460	515	718	F16	165	65		90	18 x 12	606	230	194
700	28	165	508	563	796	F16	165	70		110	20 x 12	655	255	249
750	30	190	543	585	856	F25	254	75		110	18 x 12	692	264	316
800	32	190	592	630	870	F25	254	80		110	24 x 16	736	285	365
900	36	203	632	660	1003	F25	254	85		110	24 x 16	841	331	424

DIMENSIONS
VF-733 LUG TYPE
DN40 ~ DN600

PRESSURE RATING:
DN 40-600 **16 BAR**

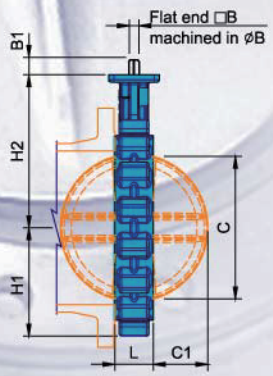

Size DN40 to 300

Size DN40 to 65

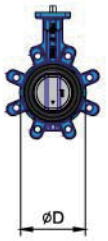

Size DN80

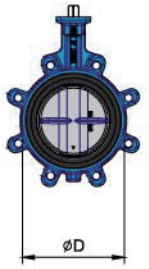

Size DN100 to 150

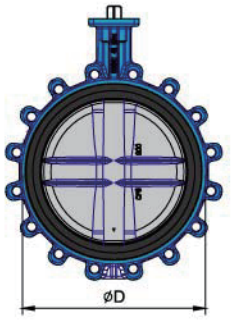

Size DN200 to 300

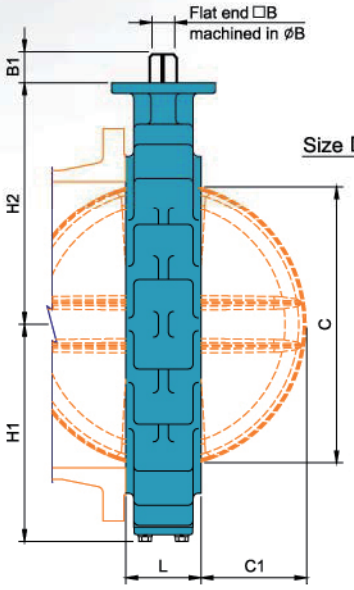

Size DN350 to 600

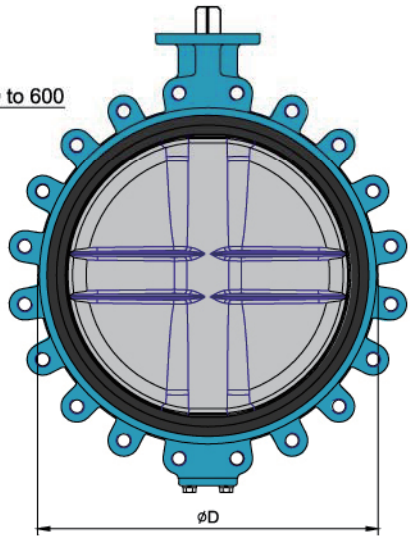

Size		Face to Face				Mounting flange (ISO 5211)		Flat shaft end			Disc clearance		Weight
mm	inch	L	H1	H2	D	Type	PCD	øB	□B	B1	C	C1	kg
40	1 1/2	33	60	120	81	F07	70	14	11	19	34	7	2.2
50	2	43	65	143	96	F07	70	14	11	19	39	8	3.4
65	2 1/2	46	71	155	110	F07	70	14	11	19	55	13	4
80	3	46	77	162	124	F07	70	14	11	19	69	19	4.5
100	4	52	89	181	148	F07	70	14	11	19	91	27	7.6
125	5	56	112	197	180	F07	70	18	14	19	115	36	9.5
150	6	56	123	210	206	F07	70	18	14	19	140	47	10.4
200	8	60	150	240	259	F10	102	22	17	24	186	68	17.5
250	10	68	179	286	320	F10	102	25	19	24	239	90	26.5
300	12	78	216	309	370	F10	102	28	22	24	288	111	43.5
350	14	78	301	329	412	F12	125	35	27	29	325	128	58
400	16	102	333	361	475	F12	125	35	27	29	375	143	81
450	18	114	358	393	530	F14	140	48	36	38	423	162	110
500	20	127	392	427	585	F14	140	48	36	38	473	182	155
600	24	154	454	492	687	F16	165	60	46	48	560	214	318

DIMENSIONS
VF-737 FLANGE TYPE
DN350 ~ DN1200

PRESSURE RATING:
DN 350- 600
DN 650-1200

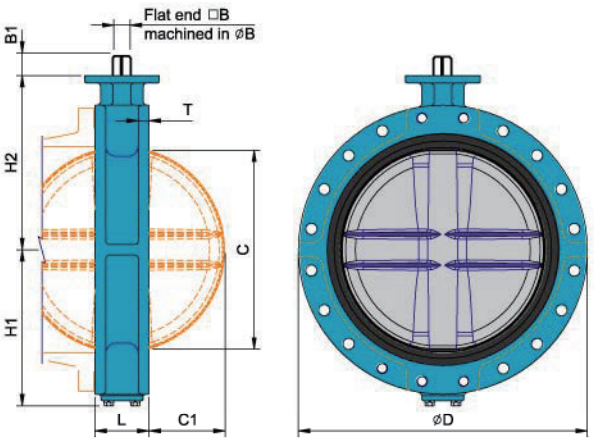

Size DN350 to 600

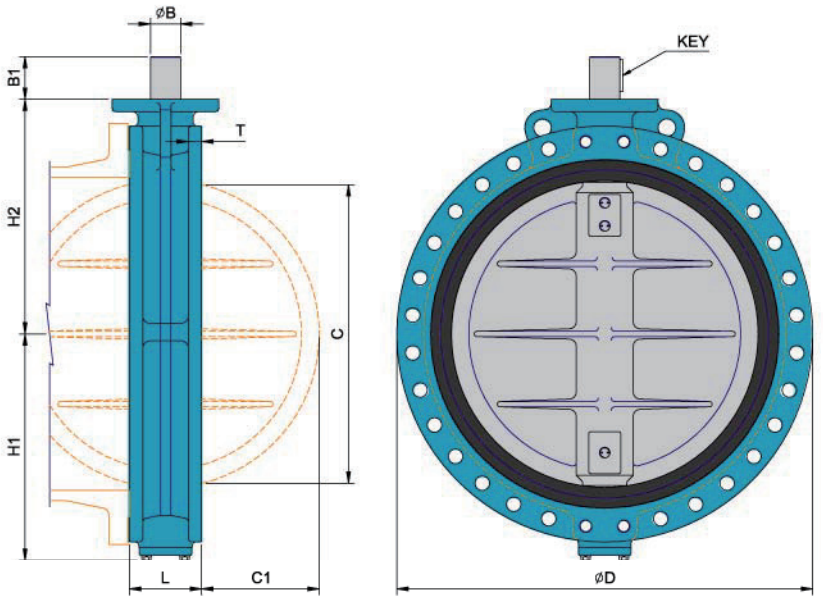

Size DN 650 to1200

Size		Face to Face				Mounting flange (ISO 5211)		Shaft end			Key	Disc clearance		Thickness of Flange	Weight
mm	inch	L	H1	H2	D	Type	PCD	øB	□B	B1		C	C1	T	kg
350	14	78	303	329	535	F12	125	35	27	29		325	128	21	69
400	16	102	335	361	600	F12	125	35	27	29		375	143	22	95
450	18	114	363	393	648	F14	140	48	36	38		423	162	27	129
500	20	127	397	427	715	F14	140	50	36	38		473	182	30	161
550	22	154	426	475	762	F14	140	50	36	38		506	188	31	191
600	24	154	454	492	840	F16	165	60	46	48		560	214	36	248
650	26	165	460	515	870	F16	165	65		90	18 x 12	606	230	40	294
700	28	165	508	563	927	F16	165	70		110	18 x 12	655	255	40	329
750	30	190	543	585	997	F25	254	75		110	20 x 12	692	264	40	431
800	32	190	592	630	1060	F25	254	80		110	24 x 16	736	285	44	507
900	36	203	632	660	1170	F25	254	85		110	24 x 16	841	331	46	621
950	38	216	682	729	1238	F25	254	95		110	28 x 16	889	350	50	750
1000	40	216	698	749	1289	F30	298	100		155	28 x 16	941	373	50	810
1050	42	216	761	813	1340	F30	298	100		180	28 x 16	977	391	50	859
1100	44	216	768.1	814	1403	F30	298	110		180	32 x 18	1024	414	50	931
1200	48	254	813.6	870	1511	F30	298	110		180	32 x 18	1131	451	56	1161

BOLTING FOR INSTALLATION

VF-730 (WAFER TYPE)
VF-733 (LUG TYPE)
VF-737 (FLANGE TYPE)

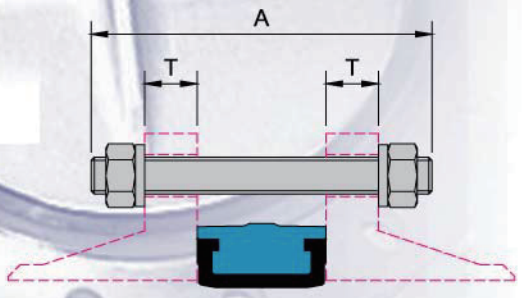

VF-730 WAFER TYPE
DN40 ~ DN900

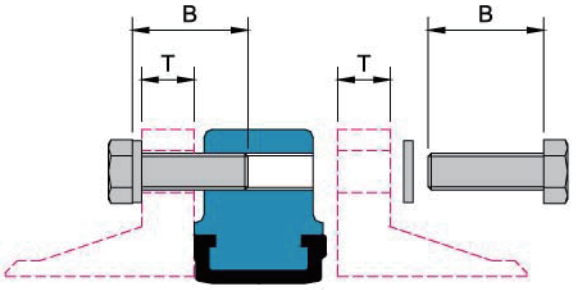

VF-733 FULL LUG TYPE
DN40 ~ DN600

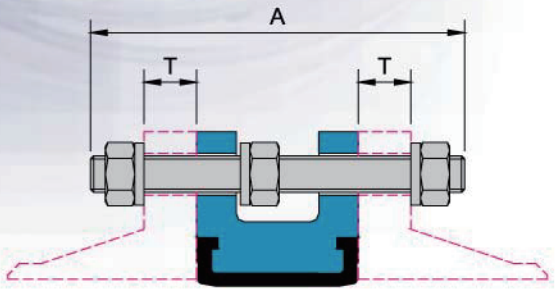

VF-737 FLANGE TYPE
DN350 ~ DN500

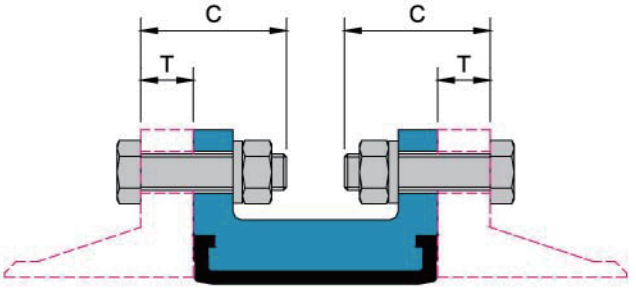

VF-737 FLANGE TYPE
DN600 ~ DN1200

Size		PN10					PN16					ASME B16.5 CLASS 150 ASME B16.47 CLASS 150 SERIES A					JIS 10K				
mm	inch	Bolt Size	A	B	C	T	Bolt Size	A	B	C	T	Bolt Size	A	B	C	T	Bolt Size	A	B	C	T
40	1 1/2	M16	115	35		18	M16	115	35		18	1/2"	105	35		18	M16	110	35		16
50	2	M16	130	40		20	M16	130	40		20	5/8"	125	40		19	M16	120	40		16
65	2 1/2	M16	130	45		20	M16	130	45		20	5/8"	135	45		22	M16	125	45		18
80	3	M16	130	45		20	M16	130	45		20	5/8"	140	45		24	M16	125	45		18
100	4	M16	140	50		22	M16	140	50		22	5/8"	145	50		24	M16	135	45		18
125	5	M16	145	50		22	M16	145	50		22	3/4"	155	55		24	M20	145	55		20
150	6	M20	160	55		24	M20	160	55		24	3/4"	160	55		25	M20	155	55		22
200	8	M20	165	55		24	M20	160	55		24	3/4"	170	60		28	M20	160	55		22
250	10	M20	175	60		26	M24	180	60		26	7/8"	185	65		30	M22	175	60		24
300	12	M20	185	60		26	M24	195	70		28	7/8"	200	70		32	M22	185	60		24
350	14	M20	185	60		26	M24	200	70		30	1 "	215	75		35	M22	185	65		26
400	16	M24	220	65		26	M27	235	80		32	1 "	245	80		37	M24	225	70		28
450	18	M24	235	70		28	M27	265	85		40	1 1/8"	265	85		40	M24	240	70		30
500	20	M24	250	70		28	M30	290	100		44	1 1/8"	285	90		43	M24	250	70		30
600	24	M27	295	80	100	34	M33	345	110	130	54	1 1/4"	330	100	120	48	M30	295	80	100	32
700	28	M27	295		100	30	M33	325		120	38	1 1/4"	390		150	71	M30	310		110	34
750	30											1 1/4"	420		150	75	M30	335		110	36
800	32	M30	330		110	32	M36	355		120	38	1 1/2"	445		170	81	M30	335		110	36
900	36	M30	345		110	34	M36	370		130	40	1 1/2"	475		180	90	M30	355		120	38
950	38											1 1/2"	485		185	87					
1000	40	M33	365		125	34	M39	395		140	42	1 1/2"	490		190	90	M36	385		135	40
1050	42											1 1/2"			200	97					
1100	44											1 1/2"			205	102	M36			145	42
1200	48	M36			135	38	M45			155	48	1 1/2"			210	108	M36			155	44

LEVER & GEAR OPERATED

VF-730 (WAFER TYPE)
VF-733 (LUG TYPE)
VF-737 (FLANGE TYPE)

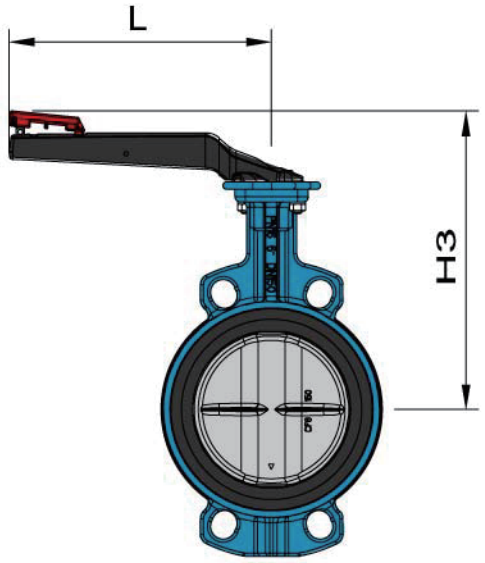

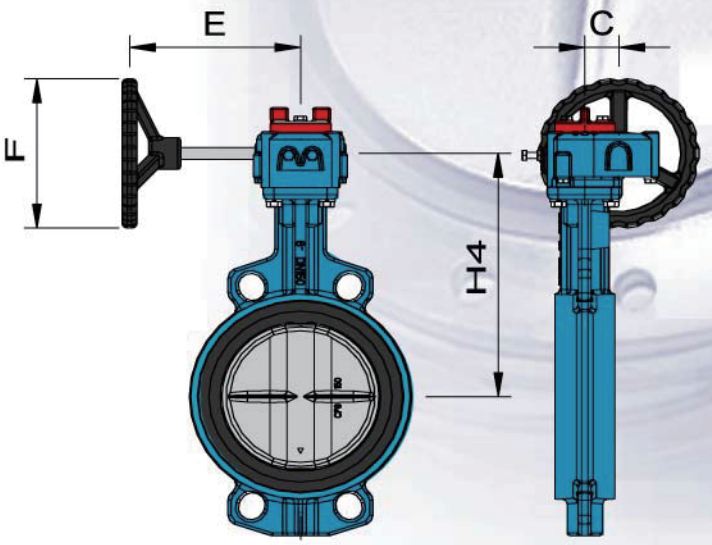

Size		Operator Series no.	Lever operator		Gear operator				Handwheel turns ON/OFF	Mounting flange (ISO 5211)	
mm	inch		H3	L	H4	C	E	F	N	Type	PCD
40	1 1/2	L 7A	195	200						F07	70
		C 07			157	41	155	150	10		
50	2	L 7A	218	200						F07	70
		C 07			180	41	155	150	10		
65	2 1/2	L 7A	230	200						F07	70
		C 07			192	41	155	150	10		
80	3	L 7A	237	200						F07	70
		C 07			199	41	155	150	10		
100	4	L 7A	256	200						F07	70
		C 07			218	41	155	150	10		
125	5	L 7B	272	250						F07	70
		C 07			234	41	155	150	10		
150	6	L 7B	285	250						F07	70
		C 07			247	41	155	150	10		
200	8	L 10	324	355						F10	102
		C 10			281	63	195	200	9		
250	10	L 10	370	355						F10	102
		C 10			327	63	195	200	9		
300	12	L 10	393	355						F10	102
		C 10			350	63	195	200	9		
350	14	C 12			370	61	255	310	9	F12	125
400	16	C 12			402	61	255	310	9	F12	125
450	18	C 14			445	81	340	400	13	F14	140
500	20	C 14			479	81	340	400	13	F14	140
550	22	C 14			527	81	340	400	13	F14	140
600	24	A2			548	123	307	400	17.5	F16	165
650	26	A2			571	160	307	400	52	F16	165
700	28	A2			619	123	307	400	17.5	F16	165
750	30	A3+S3			730	160	370	400	52	F25	254
800	32	A3+S3			775	160	370	400	52	F25	254
900	36	A3+S3			805	160	370	400	52	F25	254
950	38	A3+S3			874	160	370	400	52	F25	254
1000	40	A4+S4			945	197	471	600	90	F30	298
1050	42	A4+S4			1009	197	471	600	90	F30	298
1100	44	A4+S4			1010	197	471	600	90	F30	298
1200	48	A4+S4			1066	197	471	600	90	F30	298

INVESTMENT CASTING STAINLESS STEEL BODY

PRESSURE RATING:
DN 40-300 16 BAR

VALUE VALVES offers a new line of butterfly valves with stainless steel **investment cast bodies(1) and discs(2)** from size DN40 up to DN300(12") in both wafer and lug styles. This line of valves has the same design features of VF-730/733 valve, plus the advantage parts like **RTFE+SS316bushings(8)**, stem retainer (9), stainless steel lever operator set and gear box etc., to reach a high integrity corrosion resistance exterior for use in aggressive environment.

Anti static device (10.11) has to be equipped with this valve, since the valve disc & stem was isolated by rubber liner and stem bushings. It will collect the static, which resulted by the friction between the fluids and disc.
In order to prevent the dangers caused by static, the antistatic device is required.

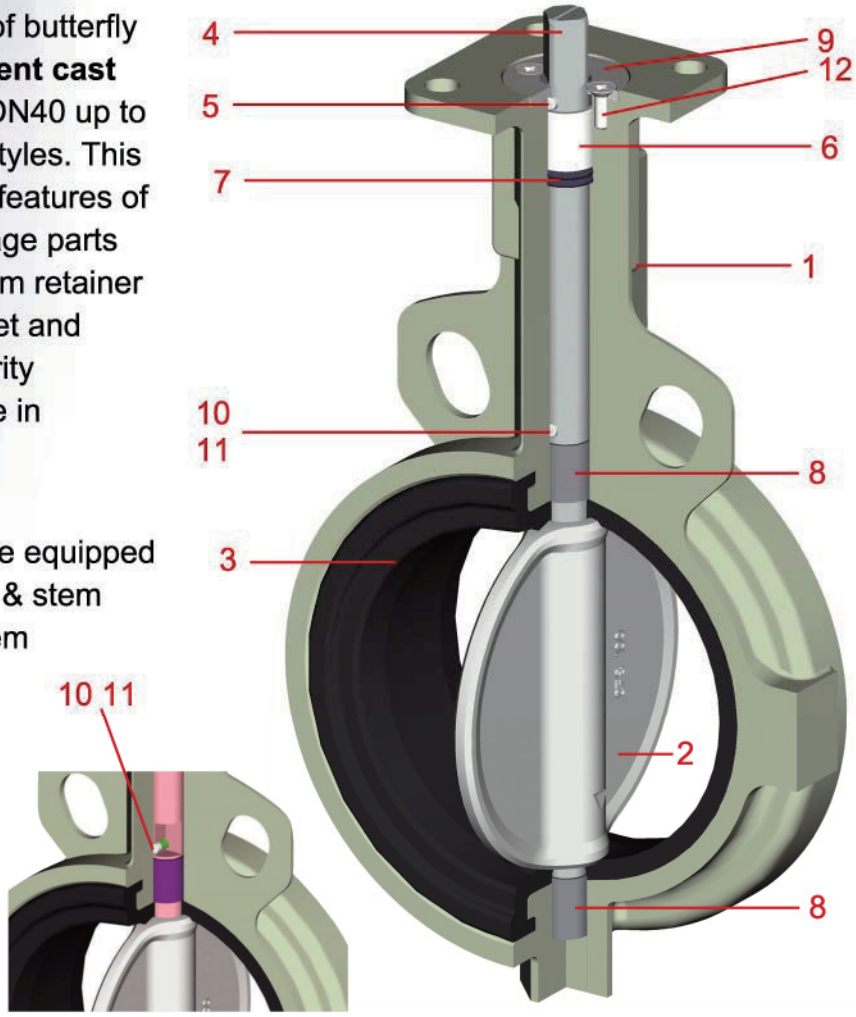

No.	Name	Materials	Specification JIS	Specification ASTM	Remark
1	BODY	STAINLESS STEEL	SCS 13A	A351 Gr. CF8	
			SCS 14A	A351 Gr. CF8M	
2	DISC	STAINLESS STEEL	SCS 13A	A351 Gr. CF8	
			SCS 14A	A351 Gr. CF8M	
3	SEAT	NBR (NITRILE)			-10° ~ 80°C (14° ~ 176°F)
		EPDM			-20° ~ 120°C (-4° ~ 248°F)
		EPT			-20° ~ 140°C (-4° ~ 284°F)
		NEOPRENE (CR)			0° ~ 80°C (32° ~ 176°F)
		SILICON			-20° ~ 180°C (-4° ~ 356°F)
		HYPALON (CSM)			-20° ~ 135°C (-4° ~ 275°F)
		VITON			-18° ~ 204°C (-0.4° ~ 400°F)
4	STEM	STAINLESS STEEL	SUS 410	A182 Gr. F6A	
			SUS 304	A182 Gr. F304	
			SUS 316	A182 Gr. F316	
5	PIN	STAINLESS STEEL	SUS 304	A182 Gr. F304	
6	BUSH	DELRIN			
7	O-RING	NBR (NITRILE)			
8	BUSH	RPTFE+STAINLESS STEEL	RPTFE+SUS 316	RPTFE+A240 Gr. 316	
9	STEM RETAINER	STAINLESS STEEL	SUS 304	A240 Gr. F304	
10	PIN (ANTI-STATIC)	STAINLESS STEEL	SUS 304	A182 Gr. F304	
11	SPRING	STAINLESS STEEL	SUS 304	A182 Gr. F304	
12	SCREW	STAINLESS STEEL	SUS 304	A193 Gr. B8	

INVESTMENT CASTING STAINLESS STEEL BODY

PRESSURE RATING:
DN 40-300 16 BAR

VF-730 WAFER TYPE

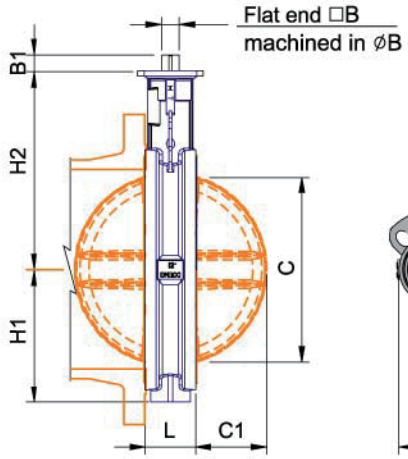

Size DN40 to 300

Size DN40 to 65

Size DN80

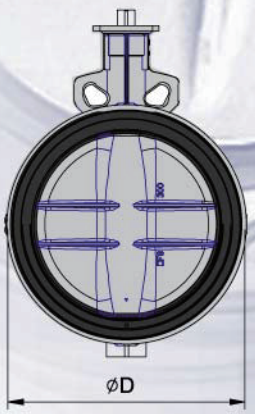

Size DN200 to 300

VF-733 LUG TYPE

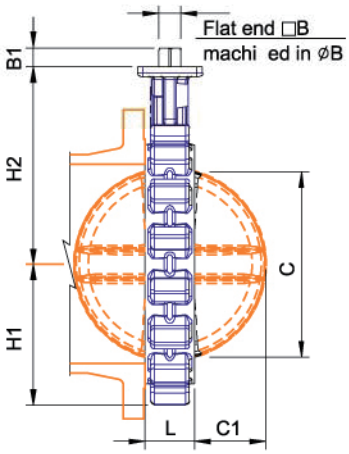

Size DN40 to 300

Size DN40 to 65

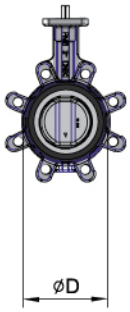

Size DN80

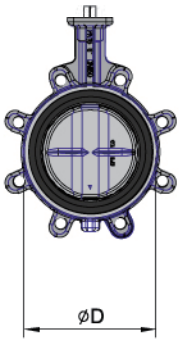

Size DN100 to 150

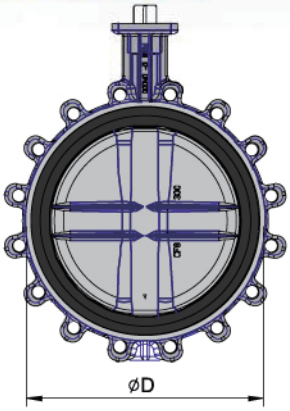

Size DN200 to 300

Size		Face to Face				Mounting flange (ISO 5211)		Flat shaft end			Disc clearance		Weight (kg)	
mm	inch	L	H1	H2	D	Type	PCD	⌀B	□B	B1	C	C1	VF-730	VF-733
40	1 1/2	33	60	120	81	F07	70	14	11	19	34	7	2.2	2.4
50	2	43	65	143	96	F07	70	14	11	19	39	8	3.3	3.7
65	2 1/2	46	71	155	110	F07	70	14	11	19	55	13	4.1	4.3
80	3	46	77	162	126	F07	70	14	11	19	69	19	4.3	4.9
100	4	52	91	181	148	F07	70	14	11	19	91	27	5.7	8.2
125	5	56	103	197	180	F07	70	18	14	19	115	36	7.9	10.3
150	6	56	120	210	206	F07	70	18	14	19	140	47	8.9	11.3
200	8	60	144	240	259	F10	102	22	17	24	186	68	14.6	18.9
250	10	68	174	288	325	F10	102	25	19	24	239	90	22.8	28.7
300	12	78	206	311	373	F10	102	28	22	24	288	111	35.2	47.1

Resideo Smart Homes Technology (Tianjin) Co., Ltd.
No.156 NanHai Road, TEDA,
Tianjin, China

For more information
resideo.com